Ref. 53020
TUNE FOOT BRACE/ FOOT CONTROL

ROPE ASSEMBLY

1.

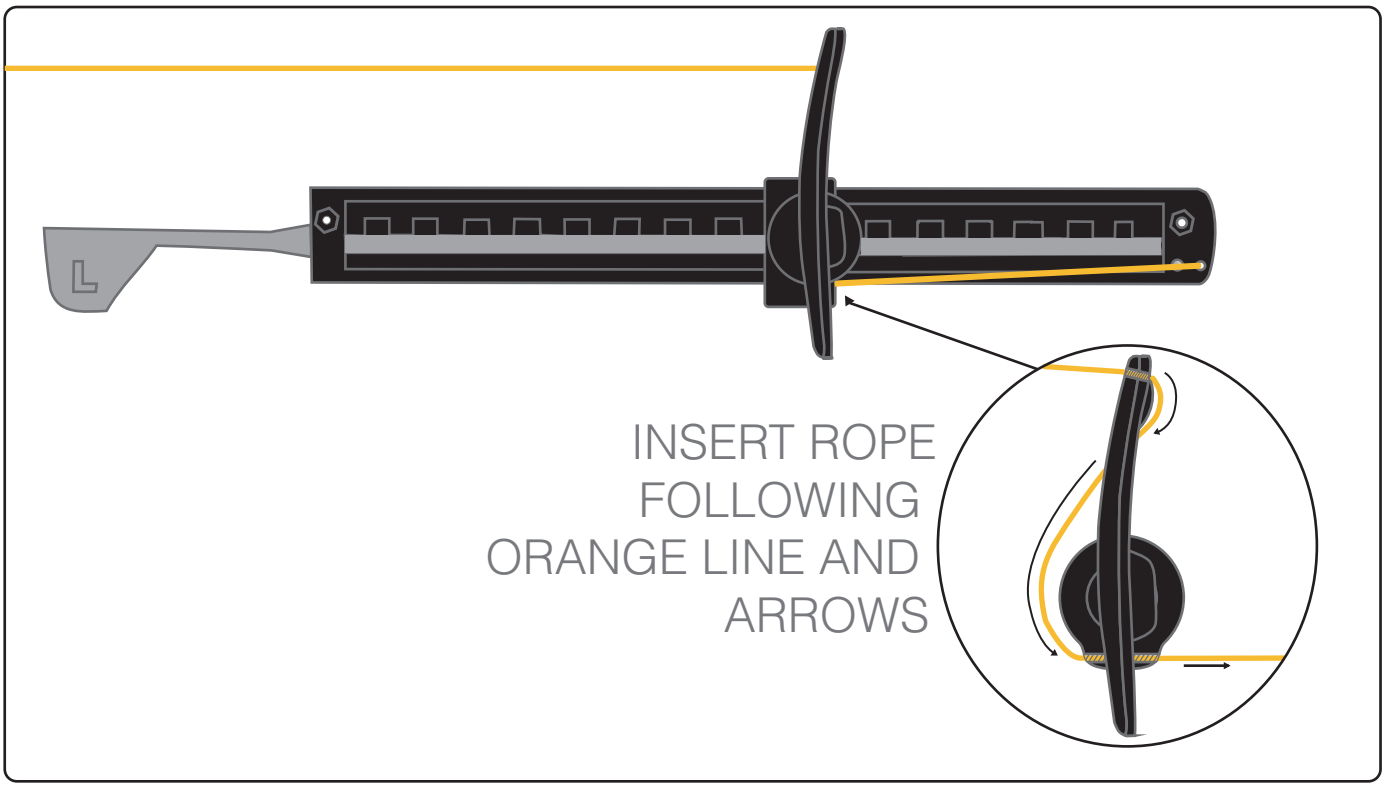
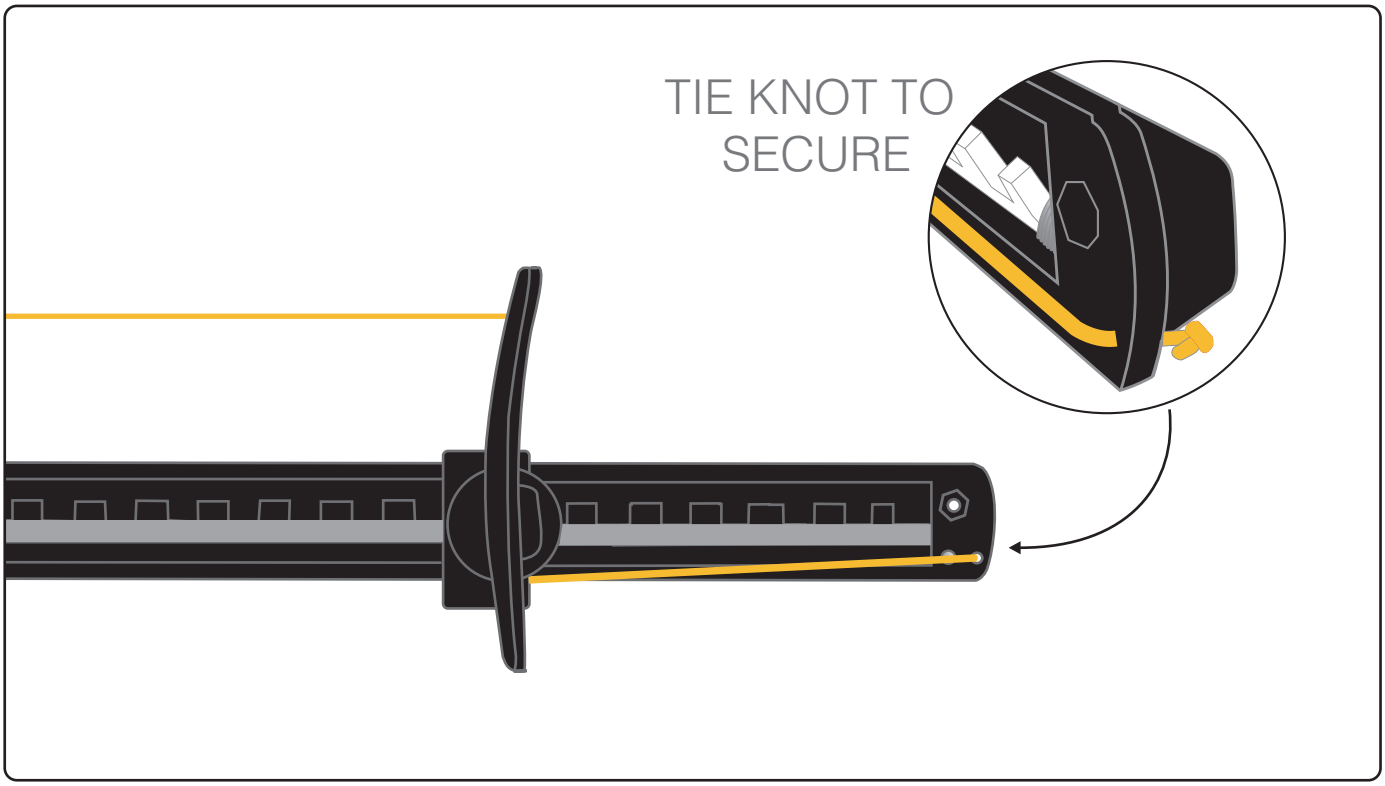
2.